For Arctic Cat Discount Parts Call 606-678-9623 or 606-561-4983

SECTION 7 - SUSPENSION

7

TABLE OF CONTENTS

Front and Rear Suspension Assembly Schematics 7-2
Shock Absorbers 7-4
Swing Arms (ACT - Rear Suspension) 7-5
Swing Arms (TBX Model) 7-6
Front A-Arms 7-7
Rear A-Arms (FIS - Rear Suspension) 7-11
Wheels and Tires 7-13

Back to Table of Contents

www.mymowerparts.com

For Arctic Cat Discount Parts Call 606-678-9623 or 606-561-4983

400/500 - FRONT

KEY

1. Retainer
2. Shock Absorber
3. Bushing
4. Sleeve
5. Adjuster Cam
6. Spring
7. Cap Screw
8. Lock Nut
9. A-Arm Assy
10. Bushing
11. Collar
12. Ball Joint Clip
13. Ball Joint
14. A-Arm
15. Knuckle Assy
16. Seal
17. Bearing Clip
18. Wheel Hub Bearing
19. Knuckle
20. Seal
21. Cap Screw
22. Drive Axle (4x4)
23. Clip (4x4)
24. Boot Repair Kit (4x4)
25. Cap Screw
26. Cap Screw
27. Boot Guard (4x4)
28. Body Screw
29. Spanner Wrench
30. Stub Axle (2x4)

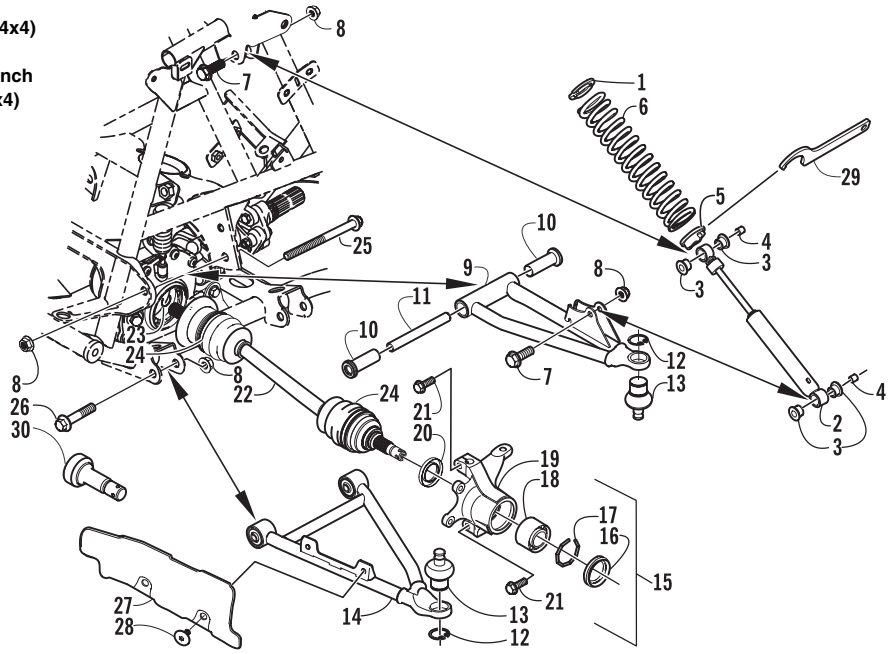

0737-578

ACT - REAR SUSPENSION

KEY

1. Cap Screw
2. Cap Screw
3. Swing Arm
4. Lock Nut
5. Swing Arm
6. Cap Screw
7. Shock Absorber
8. Bushing
9. Sleeve
10. Adjuster Cam
11. Retainer
12. Spring

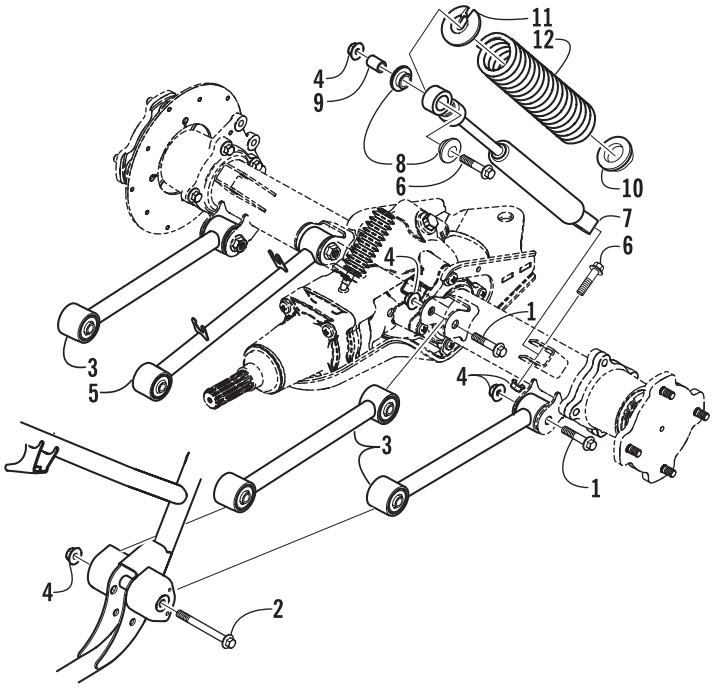

0737-585

7

www.mymowerparts.com

For Arctic Cat Discount Parts Call 606-678-9623 or 606-561-4983

KEY
1. Knuckle Assy
2. Knuckle
3. Seal
4. Seal
5. Bearing
6. Clip
7. Collar
8. Bushing
9. Cap Screw
10. Lock Nut
11. A-Arm
12. A-Arm
13. Drive Axle
14. Clip
15. Boot Repair Kit
16. Shock Absorber
17. Bushing
18. Sleeve
19. Adjuster Cam
20. Retainer
21. Spring
22. Washer
23. Cap Screw
24. Cap Screw
25. Boot Guard
26. Boot Guard
27. Cap Screw
28. Body Screw
29. Spanner Wrench

FIS - REAR SUSPENSION

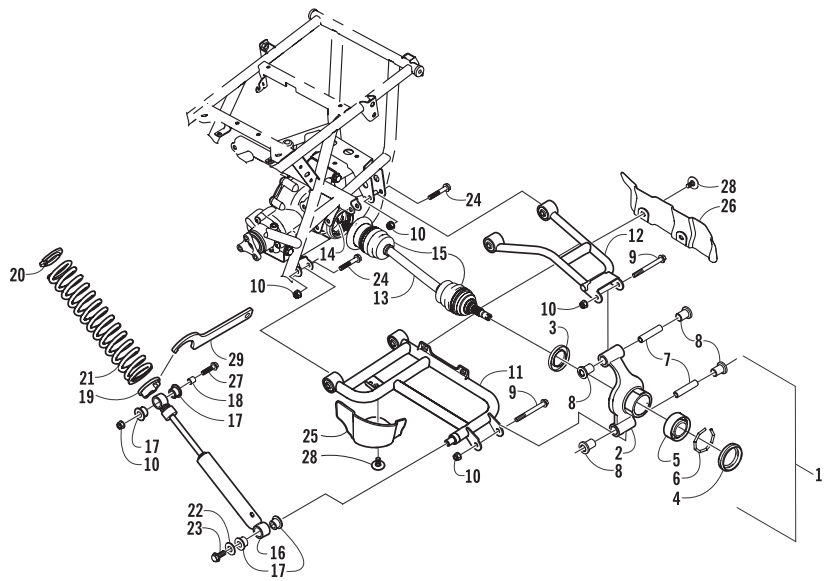

0737-579

Shock Absorbers

REMOVING

1. Secure the ATV on a support stand to elevate the wheels and to release load on the suspension.

⚠ WARNING

Make sure the ATV is solidly supported on the support stand to avoid injury.

2. Remove the two cap screws and nuts securing each front shock absorber to the frame. Account for bushings and sleeves from each.

AF605D

⚠ CAUTION

On the FIS style rear suspension, additional support stands are necessary to support the rear axle when the shock absorbers are removed or damage may occur.

3. Remove the two cap screws and nut securing each rear shock absorber to the frame and rear suspension. Account for bushings and sleeves from each.

AF626D

4. Compress the shock absorber spring, remove the retainer, and remove the spring.

Back to Table of Contents
Back to Section Table of Contents

www.mymowerparts.com

For Arctic Cat Discount Parts Call 606-678-9623 or 606-561-4983

AF730D

CLEANING AND INSPECTING

■NOTE: Whenever a part is worn excessively, cracked, or damaged in any way, replacement is necessary.

1. Clean all shock absorber components in parts-cleaning solvent.
2. Inspect each shock rod for nicks, pits, rust, bends, and oily residue.
3. Inspect all springs, spring retainers, shock rods, dampers, bushings, shock bodies, and eyelets for cracks, leaks, and bends.

INSTALLING

1. Place the shock absorber spring over the shock absorber, compress the spring, and install the retainer.
2. Place bushings and sleeves (where appropriate) into shock eyelet; then install shock with two cap screws and nuts. Tighten all nuts to 4.8 kg-m (35 ft-lb).

⚠ CAUTION

Do not tighten the nuts beyond the 4.8 kg-m (35 ft-lb) specification or the shock eyelet or mount WILL be damaged.

■NOTE: On the fully independent rear suspension models, the rear shock absorber-to-lower A-arm torque factor is 2.8 kg-m (20 ft-lb).

3. Remove the ATV from the support stand.

Swing Arms
(ACT - Rear Suspension)

REMOVING

1. Remove the cap screws and lock nuts securing the front of the swing arms to the frame brackets.
2. On the left side, remove the cap screws and lock nuts securing the rear of the swing arms to the axle housing; then remove the swing arms.

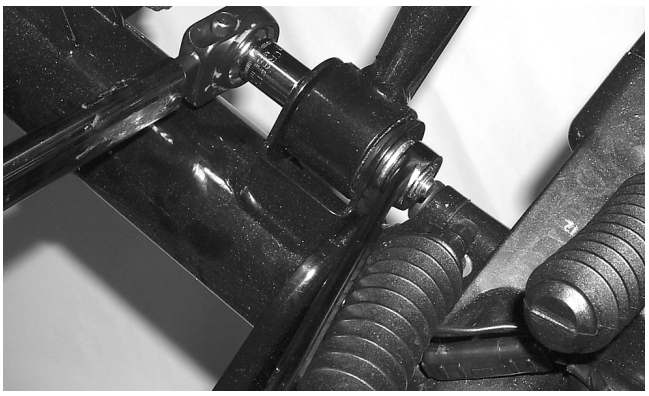

AF697D

3. On the right side, remove the cap screw and lock nut securing the outer swing arm to the axle housing; then remove the cap screw and lock nut securing the inner swing arm to the axle housing. Remove the hose grommets from the hose guides.
4. Remove the swing arms and note the location of the hose guides on the inner swing arm (for installing purposes).

CLEANING AND INSPECTING

■NOTE: Whenever a part is worn excessively, cracked, or damaged in any way, replacement is necessary.

1. Clean all swing arm components in parts-cleaning solvent.
2. Inspect all swing arm weldments for cracks or unusual bends.
3. Inspect all tubing for cracks or unusual bends.

INSTALLING

1. On the right side, place the inner swing arm into position and secure it to the axle housing with a cap screw and lock nut. Do not tighten at this time.
2. On the right side, place the outer swing arm into position and secure to the axle housing with a cap screw and lock nut. Do not tighten at this time.

www.mymowerparts.com

For Arctic Cat Discount Parts Call 606-678-9623 or 606-561-4983

3. Secure the two right side swing arms to the frame brackets with cap screws and hex nuts. Do not tighten at this time.

4. On the left side, secure the swing arms to the axle housing and frame brackets with cap screws and hex nuts; then tighten all fasteners to 4.8 kg-m (35 ft-lb).

Swing Arms
(TBX Model)

REMOVING

1. Secure the ATV on a support stand to elevate the wheels and to release the load on the suspension.

⚠ WARNING

Make sure the ATV is solidly supported on the support stand to avoid injury.

2. Place a floor jack under the rear gear case to support the gear case once the shock absorber has been removed.

3. Remove the rear wheels.

4. Remove both brake calipers. Ensure that the hydraulic brake hose is free from the swing arm.

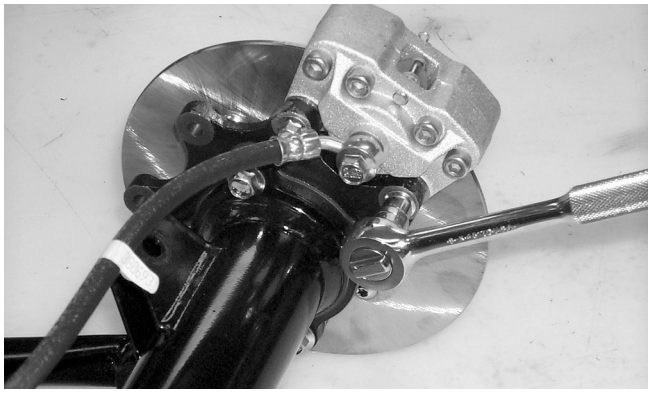

CC783

■NOTE: Note the routing of the brake hose for installing purposes.

⚠ CAUTION

Care should be taken not to damage or kink the brake cable/hose.

5. Remove the three cap screws securing the rear gear case U-joint to the driveshaft.

6. Remove the cap screw and lock nut securing the shock assembly to the swing arm. Discard the lock nut.

■NOTE: Never reuse a lock nut. Once a lock nut has been removed, it must be replaced with a new lock nut.

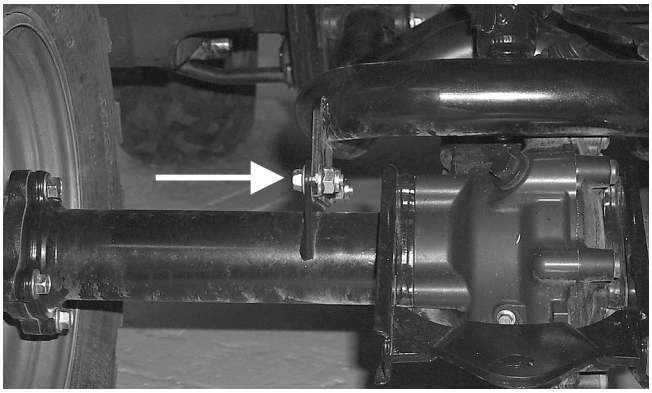

CC867A

7. Remove the two cap screws and lock nuts securing the swing arm to the frame. Discard the lock nuts.

CC864

8. Lower the floor jack and remove the swing arm/rear drive assembly.

9. Remove the four cap screws and lock nuts securing the swing arm to the axle housing; then remove the swing arm.

CLEANING AND INSPECTING

■NOTE: Whenever a part is worn excessively, cracked, or damaged in any way, replacement is necessary.

1. Clean all swing arm components in parts-cleaning solvent.

2. Inspect all swing arm weldments for cracks or unusual bends.

3. Inspect all tubing for cracks or unusual bends.

INSTALLING

1. Place the swing arm into position on the axle housing; then secure with cap screws and new lock nuts. Tighten to 4.8 kg-m (35 ft-lb).

Back to Table of Contents
Back to Section Table of Contents

www.mymowerparts.com

For Arctic Cat Discount Parts Call 606-678-9623 or 606-561-4983

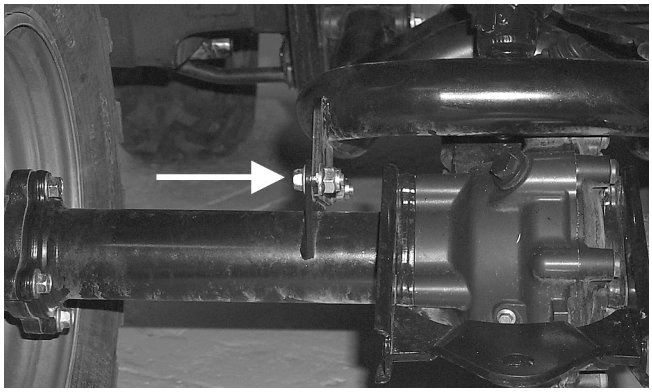

CC867A

2. Place the axle housing/swing arm assembly on a floor jack and maneuver the assembly into position in the frame.

3. Secure the swing arm to the frame with cap screws and new lock nuts. Tighten to 5.5 kg-m (40 ft-lb).

CC864

4. Secure the shock absorber to the swing arm with a cap screw and new lock nut. Tighten to 4.8 kg-m (35 ft-lb).

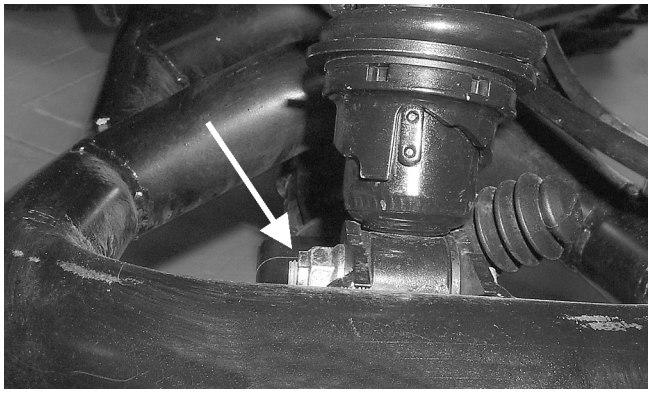

CC868A

5. Secure the rear gear case U-joint to the driveshaft with three cap screws coated with red Loctite #271. Tighten to 5.5 kg-m (40 ft-lb).

6. Secure the brake calipers to the bearing housing with existing hardware. Tighten the mechanical caliper to 2.1 kg-m (15 ft-lb) and the hydraulic caliper to 2.8 kg-m (20 ft-lb).

■ NOTE: Ensure that the brake hose is properly routed and secured on the swing arm as noted during removing.

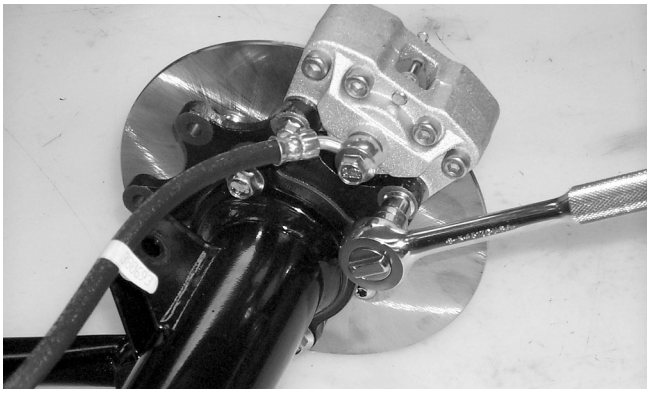

CC783

7. Install the wheels and tighten to 5.5 kg-m (40 ft-lb).

8. Remove the ATV from the support stand.

Front A-Arms

REMOVING

1. Secure the ATV on a support stand to elevate the wheel; then remove the wheel.

⚠ WARNING

Make sure the ATV is solidly supported on the support stand to avoid injury.

2. Remove the wheel cap from the hub; then remove the cotter pin from the nut.

CD008

3. Remove the nut securing the hub. Account for a washer and a hub seal.

www.mymowerparts.com

For Arctic Cat Discount Parts Call 606-678-9623 or 606-561-4983

CD010

4. Remove the brake caliper.

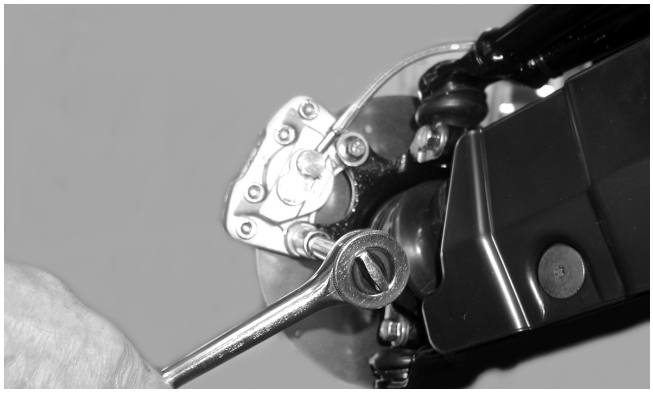

CD007

5. Remove the hub assembly.

6. Remove the cotter pin and slotted nut securing the tie rod end to the knuckle; then remove the tie rod end from the knuckle.

AF618D

7. Remove the cap screws securing the ball joints to the knuckle.

AF628D

8. Tap the ball joints out of the knuckle; then remove the knuckle.

9. Remove the lower shock absorber eyelet from the upper A-arm.

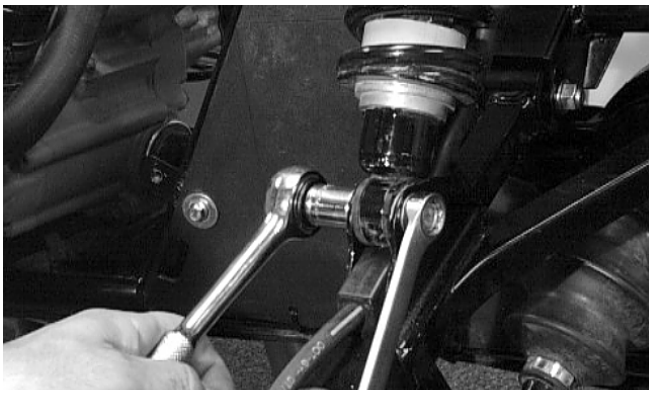

AF626D

10. Remove the cap screws securing the A-arms to the frame.

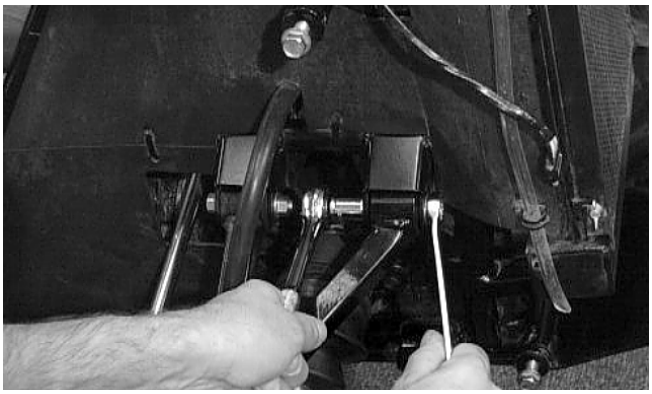

AF610D

11. Remove the circlip from the ball joint; then remove the ball joint from the A-arm.

Back to Table of Contents

Back to Section Table of Contents

www.mymowerparts.com

For Arctic Cat Discount Parts Call 606-678-9623 or 606-561-4983

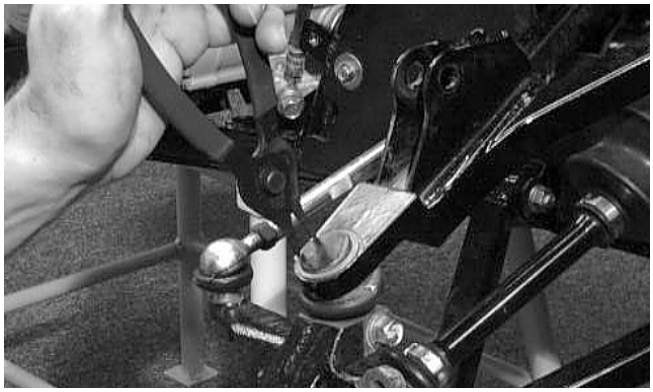

AF616D

CLEANING AND INSPECTING

■NOTE: Whenever a part is worn excessively, cracked, or damaged in any way, replacement is necessary.

1. Clean all A-arm components in parts-cleaning solvent.
2. Clean the ball joint mounting hole of all residual Loctite, grease, oil, or dirt for installing purposes.
3. Inspect the A-arm for bends, cracks, and worn bushings.
4. Inspect the ball joint mounting holes for cracks or damage.
5. Inspect the frame mounts for signs of damage, wear, or weldment damage.

INSTALLING

1. Apply green Loctite #609 to the entire outside diameter of the ball joint; then install the ball joint into the A-arm and secure with the circlip.

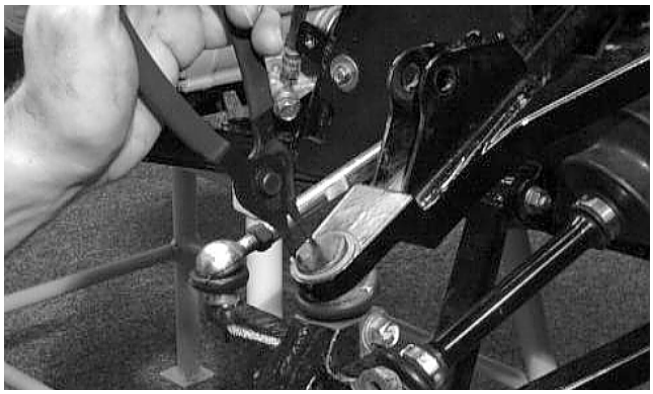

AF616D

2. Install the A-arm assemblies into the frame mounts and secure with the cap screws. Only finger-tighten at this time.

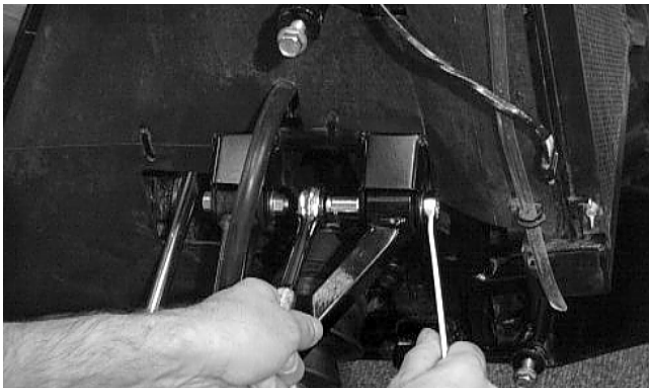

AF610D

3. Route the brake hose through the upper A-arm shock absorber mount.

AF627D

4. Secure the lower eyelet of the shock absorber to the upper A-arm. Tighten nut to 4.8 kg-m (35 ft-lb).
5. Secure the A-arm assemblies to the frame mounts (from step 2). Tighten the cap screws to 4.8 kg-m (35 ft-lb).

⚠ CAUTION

Do not tighten the nut beyond the 4.8 kg-m (35 ft-lb) specification or the shock eyelet or mount WILL be damaged.

6. Install the knuckle assembly onto the ball joints and secure with cap screws. Tighten to 4.8 kg-m (35 ft-lb).

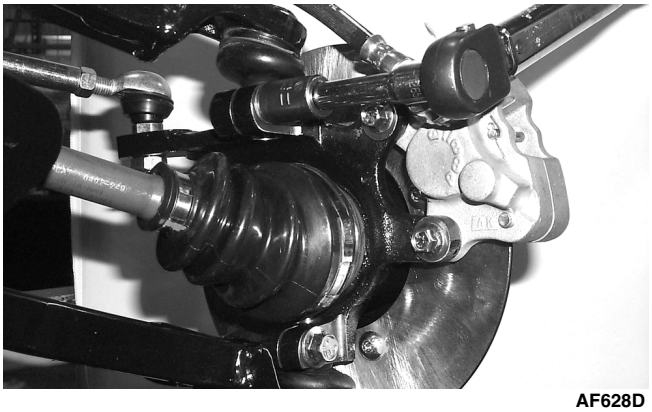

AF628D

7

www.mymowerparts.com

For Arctic Cat Discount Parts Call 606-678-9623 or 606-561-4983

7. Install the tie rod end and secure with the nut. Tighten to 4.2 kg-m (30 ft-lb); then install a new cotter pin and spread the pin to secure the nut.

■ NOTE: During assembly, new cotter pins should be installed.

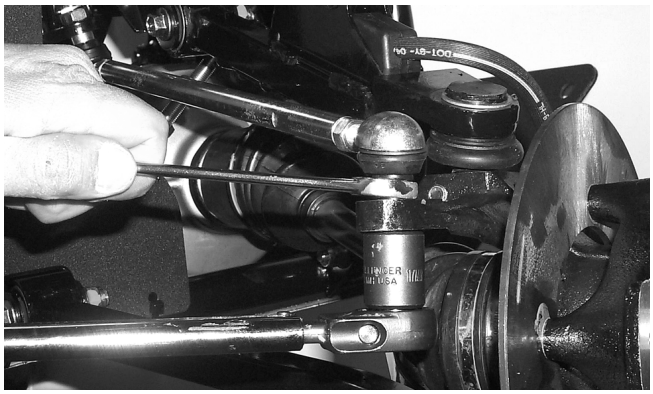

AF618D

8. Apply grease to hub sealing area and on the drive axle splines; then install the hub assembly onto the drive axle.

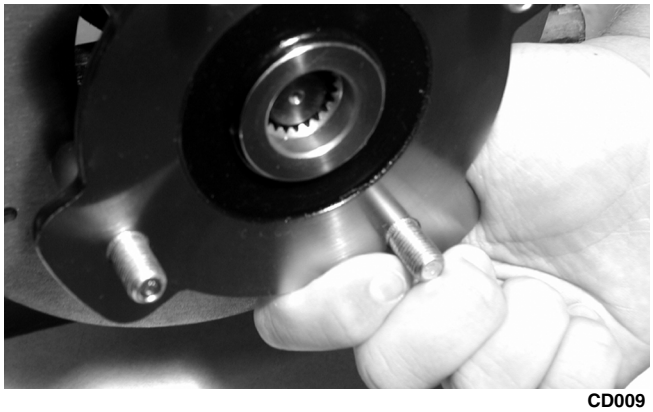

CD009

9. Insert the hub seal onto the drive axle; then position it into the hub.

CD010

10. Place the washer onto the shaft; then secure the hub assembly with the nut. Tighten only until snug.

11. Secure the brake caliper to the knuckle with the two cap screws. Tighten to 2.8 kg-m (20 ft-lb).

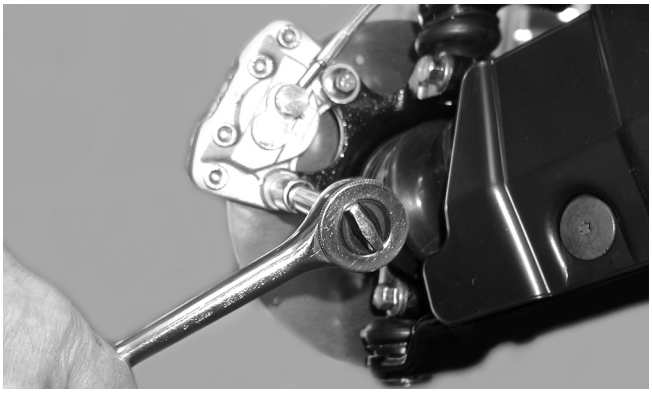

CD007

12. Secure the hub nut (from step 10) to the shaft/axle. Tighten to 10.4 kg-m (75 ft-lb).

13. Install a new cotter pin and spread the pin to secure the nut.

CD008

14. Install the wheel cap.

15. Install the wheel and tighten to 5.5 kg-m (40 ft-lb).

CD006

16. Remove the ATV from the support stand.

Back to Table of Contents
Back to Section Table of Contents

www.mymowerparts.com

For Arctic Cat Discount Parts Call 606-678-9623 or 606-561-4983

Rear A-Arms
(FIS - Rear Suspension)

REMOVING

1. Secure the ATV on a support stand to elevate the wheels.

⚠ WARNING

Make sure the ATV is solidly supported on the support stand to avoid injury.

2. Pump up the hand brake; then engage the brake lever lock.
3. Remove the wheel and rubber wheel cap.
4. Remove the cotter pin securing the hex nut; then remove the hex nut and washer. Release the brake lever lock.

CD008

5. Remove the two brake calipers (right side only).

■ NOTE: Do not allow the brake calipers to hang from their cable/hose.

6. Remove the cap screws and lock nut securing the shock absorber to the frame and lower A-arm; then remove the shock absorber.
7. Remove the cap screws securing the boot guard to the lower A-arm.

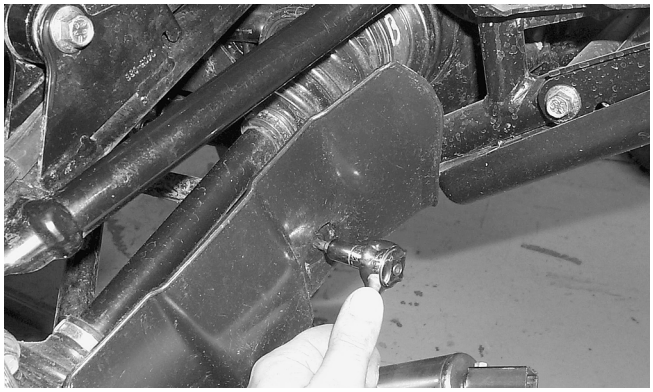

AF934

8. Slide the hub out of the knuckle and set aside.
9. Remove the cap screws and lock nuts securing the knuckle to the A-arms. Discard the lock nuts.

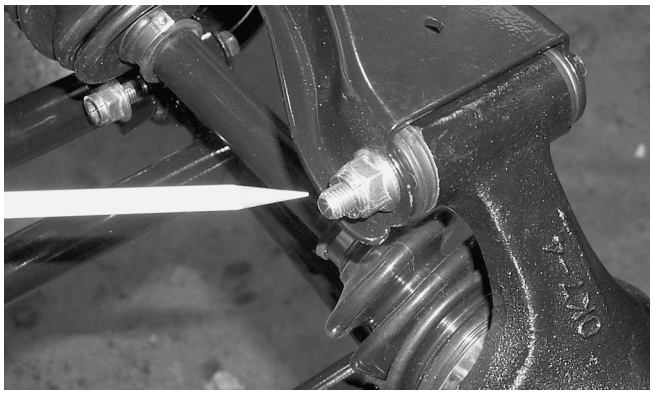

AF936

■ NOTE: Never reuse a lock nut. Once a lock nut has been removed, it must be replaced with a new lock nut.

10. Remove the cap screws and lock nuts securing the A-arms to the frame; then remove the A-arms.

■ NOTE: If removing the upper right A-arm, it will be necessary to disconnect the brake hose and brake cable from the A-arm.

CLEANING AND INSPECTING

■ NOTE: Whenever a part is worn excessively, cracked, or damaged in any way, replacement is necessary.

1. Clean all A-arm components in parts-cleaning solvent.
2. Inspect the A-arm for bends, cracks, and worn bushings.
3. Inspect the frame mounts for signs of damage, wear, or weldment damage.

www.mymowerparts.com

For Arctic Cat Discount Parts Call 606-678-9623 or 606-561-4983

INSTALLING

1. Install the A-arm assemblies into the frame mounts and secure with the cap screws and new lock nuts. Only finger-tighten at this time.

2. Slide the knuckle onto the drive axle and into position on the A-arms; then secure the knuckle to the A-arms with cap screws and new lock nuts. Tighten to 4.8 kg-m (35 ft-lb).

3. Tighten the hardware securing the A-arms to the frame mounts (from step 1) to 4.8 kg-m (35 ft-lb).

4. Apply grease to hub sealing area and on the drive axle splines; then install the hub assembly onto the drive axle.

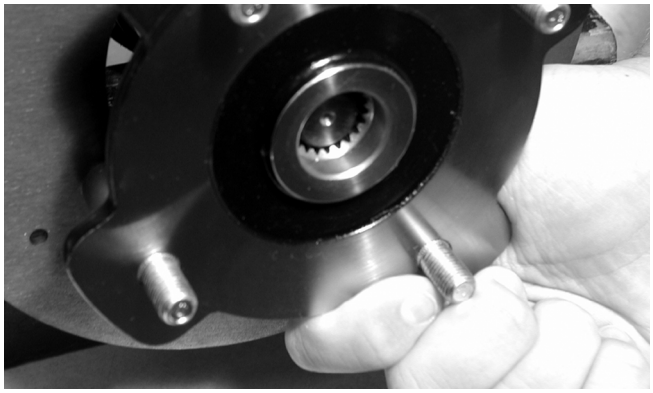

CD009

5. Insert the hub seal onto the shaft; then position it into the hub.

CD010

6. Place the washer onto the drive axle; then secure the hub assembly with the nut. Tighten only until snug.

7. Secure the brake caliper to the knuckle with the two cap screws (right side only). Tighten the mechanical caliper to 2.1 kg-m (15 ft-lb). Tighten the hydraulic caliper to 2.8 kg-m (20 ft-lb).

■ NOTE: Ensure that the brake hose and brake cable are properly routed and secured to the upper A-arm.

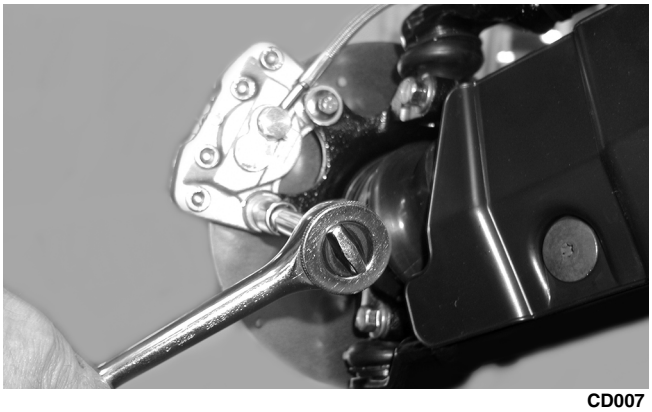

CD007

8. Secure the hub nut (from step 6) to the drive axle. Tighten to 10.4 kg-m (75 ft-lb).

9. Install a new cotter pin and spread the pin to secure the nut.

CD008

10. Secure the shock absorber to the frame with a cap screw and new lock nut. Tighten to 4.8 kg-m (35 ft-lb).

11. Secure the shock absorber to the lower A-arm with a cap screw and new lock nut. Tighten to 2.8 kg-m (20 ft-lb).

12. Secure the boot guard to the lower A-arm with the two cap screws. Tighten securely.

13. Install the wheel cap.

14. Install the wheel and tighten to 5.5 kg-m (40 ft-lb).

15. Remove the ATV from the support stand.

www.mymowerparts.com

For Arctic Cat Discount Parts Call 606-678-9623 or 606-561-4983

Wheels and Tires

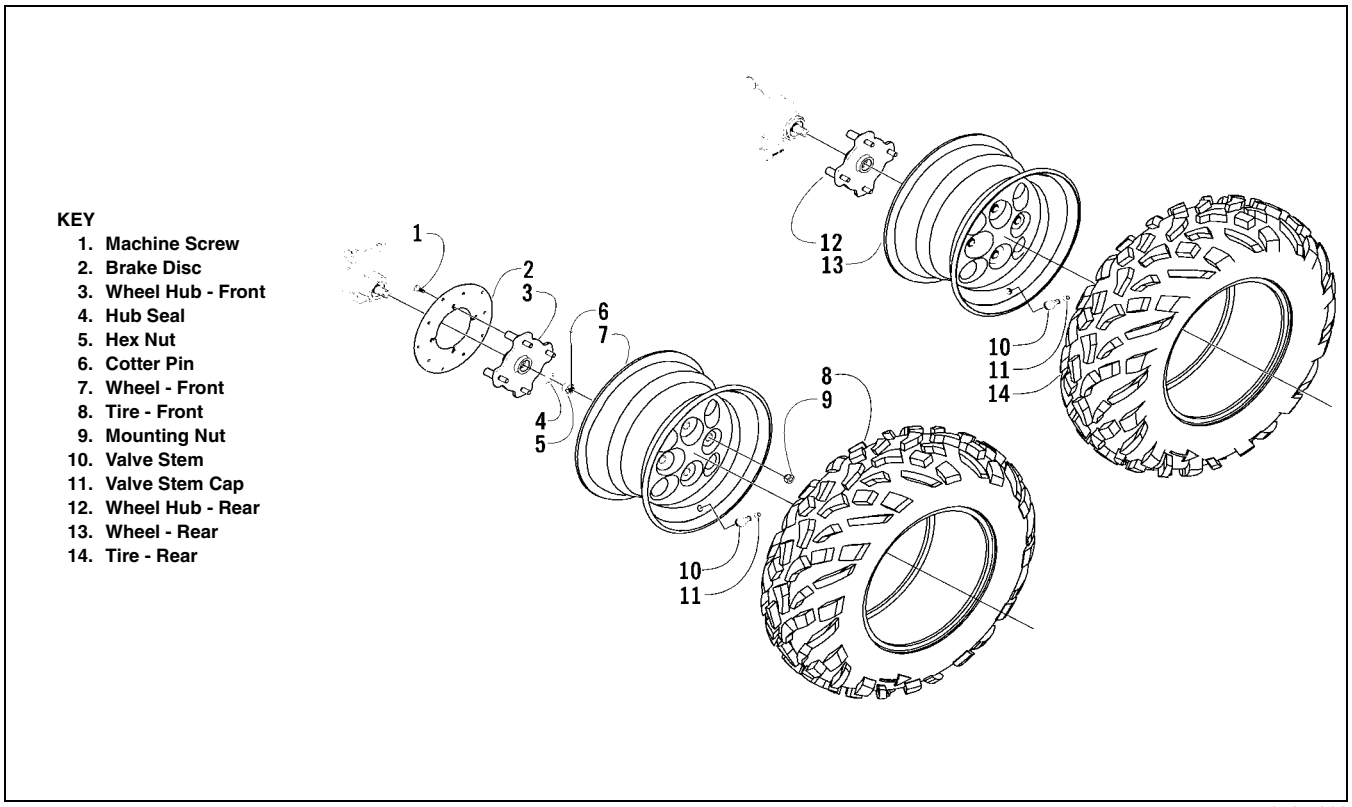

0737-698

TIRE SIZE

⚠ WARNING

Use only Arctic Cat approved tires when replacing tires. Failure to do so could result in unstable ATV operation.

The ATV is equipped with low-pressure tubeless tires of the size and type listed below. Do not under any circumstances substitute tires of a different type or size.

⚠ WARNING

Do not mix tire tread patterns. Use the same pattern type on front and rear. Failure to heed warning could cause poor handling qualities of the ATV and could cause excessive drive train damage not covered by warranty.

TIRE INFLATION PRESSURE

Front and rear tire inflation pressure should be 0.35 kg/cm² (5.0 psi).

REMOVING

1. Secure the ATV on a support stand to elevate the wheels.

⚠ WARNING

Make sure the ATV is solidly supported on the support stand to avoid injury.

2. Remove the wheels.

■ NOTE: Keep left-side and right-side wheels separated for installing them on their proper sides.

CD006

www.mymowerparts.com

For Arctic Cat Discount Parts Call 606-678-9623 or 606-561-4983

CLEANING AND INSPECTING

■ NOTE: Whenever a part is worn excessively, cracked, or damaged in any way, replacement is necessary.

1. Clean the wheels and hubs with parts-cleaning solvent.
2. Clean the tires with soap and water.
3. Inspect each wheel for cracks, dents, or bends.
4. Inspect each tire for cuts, wear, missing lugs, and leaks.

INSTALLING

1. Install each wheel on its hub.

CD006

■ NOTE: Make sure each wheel is installed on its proper hub as noted in removing (the "rotation arrow" must indicate forward direction of rotation).

AF612D

2. Tighten to 5.5 kg-m (40 ft-lb).

CHECKING/INFLATING

1. Using an air pressure gauge, measure the air pressure in each tire. Adjust the air pressure as necessary to meet the recommended inflation pressure.

CD005

2. Inspect the tires for damage, wear, or punctures.

⚠ WARNING

Do not operate the ATV if tire damage exists.

■ NOTE: If repair is needed, follow the instructions found on the tire repair kit or remove the wheel and have it repaired professionally.

■ NOTE: Be sure all tires are the specified size and have identical tread pattern.

3. Check the front wheel toe-in and toe-out and adjust as necessary (see Section 8).
4. Test drive the ATV on a dry, level surface and note any pulling to the left or right during acceleration, deceleration, and braking.

■ NOTE: If pulling is noted, measure the circumference of the front and rear tires on the pulling side. Compare the measurements with the tires on the opposite side. If pulling is noted during braking only, check and adjust the brakes as necessary and recheck operation (see Section 2).

5. Increase the air pressure in the tires with the smallest circumference measurement until all tires are equal in circumference.
6. Repeat steps 4-5 as necessary to ensure proper handling.

www.mymowerparts.com